Agromatic®
Stellantriebe · Actuators

Installation and Operating Manual

(Translation of the German Original)

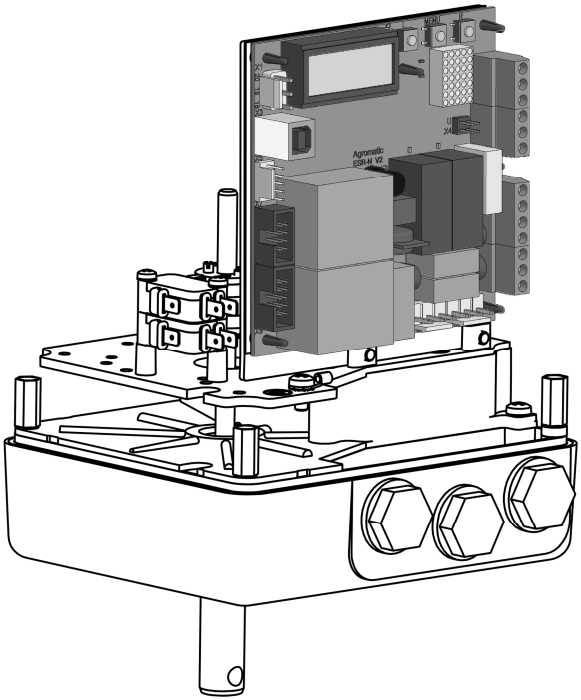

Position Controller ESR-N (Option)

Keep for future reference!

Revision: 2022-01-01

Legal Notice

© Agromatic Regelungstechnik GmbH

This operating manual and all illustrations contained therein are protected by copyright law. Any use of the material outside the restrictions of the copyright law without prior written consent from the publisher shall be prohibited and liable to legal prosecution. This shall apply in particular to reproductions, copies, translations, microfilming, storage and processing with electronic systems.

We reserve the right to make technical changes as a result of improvements to performance characteristics and further developments without prior written notice.

Agromatic Regelungstechnik GmbH

Postfach 1162

33804 Oerlinghausen

Germany

Phone: +49 5202 9739-284

Fax: +49 5202 9739-25

E-mail: vertrieb@agromatic.de

Web: www.agromatic.de

Revision: 2022-01-01
Document: BA_ESR-N_EN_rev.03
Order no.: PM-100081

Contents

1 Safety and EMC instructions

- Only properly trained technical staff may carry out testing, parameterization, calibration and adjustment tasks.
- The ESD (electrostatic discharge) guidelines must be observed when handling electronic components and assemblies.
- All applicable safety regulations must be complied with, including but not only the regulations on personal protection when handling mains voltage.
- The protective measures laid down in the regulations issued by the VDE (German Association for Electrical, Electronic and Information Technologies) and by the local utility company must be implemented. VDE regulation 0105 “Working on Live Components” in particular shall be observed.
- The supply line to the controller must have a cross-section in accordance with the VDE regulations.
- Separate shielded wires with a minimum cross-section of 0.5mm² must be used for low voltages (e.g. setpoint and actual value). The shielding must be secured directly at the housing (PE) and routed up to the controller. The shielding must not have a conductive connection to the controller ground.
- The mains power line must be routed separately from the signal line, and both lines must not cross.
- Incorrect installation and operation as well as manipulation by a third party will invalidate the right to make claims under the warranty.

i

Important information!

The installation and operating instructions for the actuators series N, K, KA, and V must be complied with at all times!

2 Controller

- Linear three-step controller with selectable hysteresis.
- Setpoint value input for moving the actuator.
- In addition, a selectable cut-off delay time can be programmed to allow over-travel of the actuator beyond the switching point.
- All controller parameters must be determined and programmed by qualified technical staff to match the complete control system.

3 Electrical connection

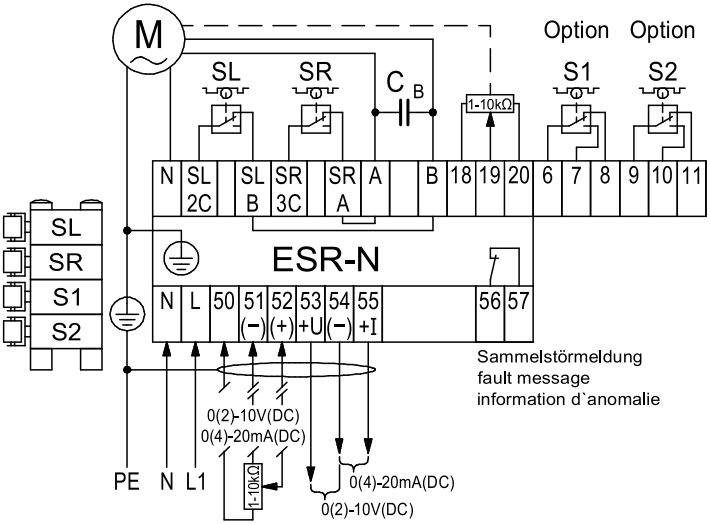

Fig. 1: Schematic diagram ESR-N internal

Standard:

ESR-N electronic position controller
M motor of the actuator
SL position limit switch CCW (left-hand) rotation
SR position limit switch CW (right-hand) rotation
N output terminal neutral wire, motor connection
A output terminal SR, motor and capacitor connection
B output terminal SL, motor and capacitor connection
N input terminal neutral wire, controller supply
L input terminal phase, controller supply
50 voltage supply (+4.5V) if potentiometer used as setpoint device
51 **–** setpoint input **(**GND)
52 **+** setpoint input (wiring depends on jumper setting X4)
53 **+** actual value voltage output
54 **–** actual value current/voltage output (GND isolated)
55 **+** actual value current output
56, 57 fault message: see section *“11 Reset-function*
The controller can be reset to factory settings as follows.

1. Switch off the operating voltage of the controller.
2. Press all three buttons Ⓛ Ⓜ Ⓡ at the same time and keep them pressed.
3. Switch on the operating voltage of the controller and keep the buttons pressed.

4. After 3 s, the LED display shows the character string

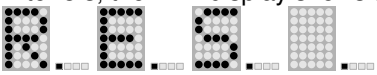

5. Release the buttons. The controller is now reset to factory settings.

Fault message”

> **Important information!**
> The actual value current/voltage output is electrically isolated from setpoint input.

4 Setpoint input

The configuration of the setpoint input can be changed using jumper X4.

Position I:	input 0 … 20mA, 250Ω burden resistor
Position U:	input 0 … 10V, approx. 10kΩ input impedance
Position neutral:	input 0 … 4,5V, approx. 1MΩ input impedance (for use of potentiometer as setpoint device)

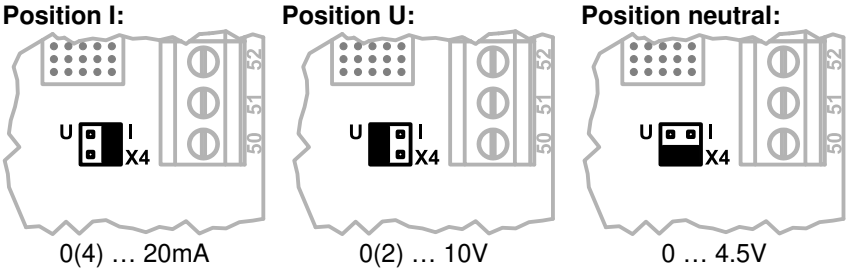

Fig. 2: Setpoint input configuration using jumper X4

The end positions can be assigned either fixed setpoints (0mA, 4mA, 20mA) or optionally defined setpoints within the range of 0 … 20mA (see submenus M3 and M4).

5 Safety functions

There are two error conditions to which the controller can react by moving to a safe position:

- Failure of the setpoint signal, i.e. setpoint < 4 mA or < 2 V, provided that the minimum setpoint 4 mA or 2 V is set. (default)
  As soon as the setpoint is within the permissible range again (i.e. at least 4 mA or 2 V), the error is reset.
- The temperature at the controller is more than 75 °C for more than 3 minutes. (Option, must be ordered)
  As soon as the temperature at the controller reaches a maximum of 70 °C for at least 3 minutes, the error is reset.

The controller can react to the error condition as follows:

- ▶ Actuator travels to 4 mA/2 V position (default)
- ▶ Actuator stops at current position (Option, must be ordered)
- ▶ Actuator travels to the 20 mA/10 V Position (Option, must be ordered)

6 Controller parameters

Left end position

Assignment of the mechanical actuator position to the parameterized travel range. The left end position is the 0% reference point for the travel range.

Right end position

Assignment of the mechanical actuator position to the travel range. The right end position is the 100% reference point for the travel range.

Setpoint input for left end position

Sending this setpoint value to the position controller causes the actuator to move to the parameterized left end position. For the setting of “free values” the setpoint value has to be applied at terminals 52-51 during the parameterization!

Setpoint input for right end position

Sending this setpoint value to the position controller causes the actuator to move to the parameterized right end position. For the setting of “free values” the setpoint value has to be applied at terminals 52-51 during the parameterization!

Actual value output for left end position

The output value at terminals 53-54 and 55-54 is a representation of the actual actuator position. The actual value output when the left end position is reached is assigned to the controller-internal 0% reference point.

Actual value output for right end position

The output value at terminals 53-54 and 55-54 is a representation of the actual actuator position. The actual value output when the right end position is reached is assigned to the controller-internal 100% reference point.

Hysteresis (related to parameterized travel range)

The hysteresis is a percentage of the parameterized travel range. The controller stops the motor this far before the exact setpoint position is reached. By means of the hysteresis the influence of the stopping time of the whole system consisting of the actuator in combination with the valve can be minimized.

Additionally the hysteresis makes the controller less sensitive. This means that the difference between the setpoint position and the actual position of the actuator has to exceed the parameterized hysteresis value **plus** 0.12% of the parameterized travel range to make the controller readjust the actual position.

Cut-off delay time

If required, the controller can be made stop the motor the value of the cut-off delay time later. However, the motor will be stopped at the latest when reaching the exact setpoint position.

Monitoring of the rotational direction

In the automatic mode, the controller uses the changing actual value to check whether the actuator rotates in the correct direction when the relay is activated. If the controller detects an incorrect rotational direction, the actuator is stopped after 3s, and an error message is issued. The error message and the stopped status of the actuator are reset by switching to the MANU mode.

Blocking protection

Checks the actual value change in the automatic mode when a relay is activated. If the change is very small or if the actual value does not change at all, the actuator is stopped after 3s. After a pause of 1s another attempt is made to move the actuator. After a total of 3 attempts the actuator is stopped, and an error message is issued. The error message and the stopped status of the actuator are reset by switching to the MANU mode or by issuing a positioning command in reverse direction.

Important information!

Monitoring of the rotational direction and **blocking protection** only work if the rotational direction and the positioning speed of the actuator have been measured correctly during parameterization (see section *“10 Programming mode”*).

If monitoring of the rotational direction and blocking protection is switched on in the parameterization menu even though the measuring was faulty, an error message is displayed. In this case the end positions have to be assigned again; during this process the controller tries to measure the rotational direction and the positioning speed of the actuator again.

Contrast

Sets the display contrast if a plain-text LCD display is installed.

7 Operation

The ESR-N is operated by means of 3 buttons and one sliding switch.

The controller status is indicated on a 5x7 dot matrix LED display.

The actuator is optionally available with a plain-text LCD display (see section *“14 LCD display (option)”*). However, this display cannot be retrofitted.

Sliding switch AUTO/MANU

AUTO selection of the AUTOMATIC operating mode
MANU selection of the MANUAL operating mode

Button MENU

< 2s show the next value (see section *“14 LCD display (option)”*)
> 2s open the programming menu

Button MENU (within the programming menu)

– Open submenu
– Confirm input and exit submenu

Button L

– Switch on relay for left-hand rotation
– Select the menu option
– Select the parameter

Button R

– Switch on relay for right-hand rotation
– Select the menu option
– Select the parameter

Depiction of the buttons and the dot matrix LED display

	dot matrix LED display
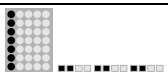	Representation of the dot flash sequence (here: dot flashes twice)
	Buttons L, MENU, R

8 Automatic mode

Before the controller is switched to automatic operation the controller must be parameterized! (see section *“10 Programming mode”*)

Representation and operation

		Automatic mode is active, but the motor is off because the setpoint position has been reached
		Dot flashes continuously: Faulty parameterization (see section *“13 Error messages”*)
		Left-hand rotation is active because the controller is moving the actuator to the setpoint position
		Right-hand rotation is active because the controller is moving the actuator to the setpoint position
		Monitoring of rotational direction triggered
		Blocking protection triggered
L		Automatic mode: Button L has no function
R		Automatic mode: Button R has no function
M		Press the button < 2s: LCD display shows the next value

9 Manual mode

Representation and operation

		Manual mode
		Dot flashes continuously: Faulty parameterization, automatic mode not possible (see section *“13 Error messages”*)
L		Actuator rotates in left-hand direction
R		Actuator rotates in right-hand direction
M		Press the button < 2s: LCD display shows the next value
M		Press button > 2s: Activation of programming mode

10 Programming mode

STOP

Before the programming mode is activated, the position limit switches and the potentiometer must be set!

Parameterization

- The potentiometer must move during the parameterization of the end positions because the controller needs to measure the rotational direction and the positioning speed of the actuator.
- Measuring of rotational direction and positioning speed may not work correctly with extremely slow actuators. If monitoring of the rotational direction or blocking protection is switched on in the parameterization menu even though the measuring was faulty, an error message is displayed (see section 13).
- The limits of the parameterized travel range muss cover the maximum range by more than 50%, otherwise a parameter error will be issued.
- The limits for the setpoint and the actual value must each cover the maximum range by more than 20%, otherwise the submenu cannot be exited.
- The predefined values 0mA/4mA/20mA refer to the calibrated values of the current output and the setpoint input respectively.

Activation of programming mode

M		Press button > 2s: Activation of programming mode

Operation in the programming mode

Ⓛ	In main menu: scroll upwards In submenu: change value
Ⓡ	In main menu: scroll downwards In submenu: change value
Ⓜ	In main menu: jump to submenu In submenu: confirm input and exit the submenu

When a submenu is exited, the relevant value is saved immediately!

The programming mode can be exited at any time by switching to the automatic mode. In this case the values in the currently active submenu are not saved!

i

Important information!

The saving of values can be suppressed **only for the currently active submenu** by switching to the AUTO operating mode.

Dot flash sequences in the programming mode (dot matrix LED display)

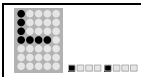	Dot flashes once: main menu
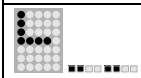	Dot flashes twice: submenu / parameter
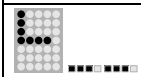	Dot flashes three times : parameter setting where required (free values)

Main menu

The main menu is shown by activating the programming mode (see above).

Once a menu item is completed, the main menu is displayed again, allowing the next item to be edited.

▲ Ⓛ ® ▼		M1: left end position (0%)
		M2: right end position (100%)
		M3: setpoint input for left end position
		M4: setpoint input for right end position
		M5: actual value output for left end position
		M6: actual value output for right end position
		M7: hysteresis
		M8: cut-off delay time
		M9: monitoring of the rotational direction
		M10: blocking protection
		M11: contrast setting for the LCD display
		M12: EXIT – exits the programming menu

Submenu M1: left end position (0%)

	Ⓜ	Jump to submenu M1

	Ⓛ	Actuator moves to the left
	®	Actuator moves to the right

	M	Save position, return to main menu item M2

Submenu M2: right end position (100%)

	M	Jump to submenu M2
	L	Actuator moves to the left
	R	Actuator moves to the right
	M	Save position, return to main menu item M3

Submenu M3: setpoint input left end position

	M	Jump to submenu M3

▲		M	Save 0mA, return to main menu item M4
L		M	**Default:** Save 4mA, return to main menu item M4
R		M	Save 20mA, return to main menu item M4
▼		M	Jump to sub-submenu “free values”

	L R	No function
	M	Save the setpoint input value applied at terminals 52-51, return to main menu item M4

Submenu M4: setpoint input for right end position

	M	Jump to submenu M4

Possible selection limited by the setting in submenu M3.

▲		M	Save 0mA, return to main menu item M5
L		M	Save 4mA, return to main menu item M5
R		M	**Default:** Save 20mA, return to main menu item M5
▼		M	Jump to sub-submenu “free values”

	L R	No function
	M	Save the setpoint input value applied at terminals 52-51, return to main menu item M5

Submenu M5: actual value output for left end position

	M	Jump to submenu M5

▲		M	Save 0mA, return to main menu item M6
L		M	**Default:** Save 4mA, return to main menu item M6
R		M	Save 20mA, return to main menu item M6
▼		M	Jump to sub-submenu “free values”

	L	Reduce actual value output [1)]
	R	Increase actual value output [1)]
	M	Save actual value output, return to main menu item M6

[1)] Holding the keys down will reduce/increase the value faster.

Submenu M6: actual value output for right end position

	M	Jump to submenu M6

Possible selection restricted by the setting in M5.

▲		M	Save 0mA, return to main menu item M7
L		M	Save 4mA, return to main menu item M7
R		M	**Default:** Save 20mA, return to main menu item M7
▼		M	Jump to sub-submenu “free values”

	L	Reduce actual value output [2)]
	R	Increase actual value output [2)]

	M	Save actual value output, return to main menu item M7

[2)] Holding the keys down will reduce/increase the value faster.

Submenu M7: hysteresis

	M	Jump to submenu M7

		M	Save special hysteresis (option, only on request), return to main menu, menu item M8
▲ L		M	**Default:** Save 0.24%, return to main menu item M8
		M	Save 0.49%, return to main menu item M8
		M	Save 0.73%, return to main menu item M8
		M	Save 0.98%, return to main menu item M8
		M	Save 1.22%, return to main menu item M8
		M	Save 1.83%, return to main menu item M8
		M	Save 2.44%, return to main menu item M8

R ▼		M	Save 3.66%, return to main menu item M8
		M	Save 4.88%, return to main menu item M8
		M	Save 6.10%, return to main menu item M8

Submenu M8: cut-off delay time

	M	Jump to submenu M8

		M	Save 0ms, return to main menu item M9
▲ L R ▼		M	**Default:** Save 20ms, return to main menu item M9
		M	Save 40ms, return to main menu item M9
		M	Save 60ms, return to main menu item M9
		M	Save 80ms, return to main menu item M9
		M	Save 100ms, return to main menu item M9
		M	Save 200ms, return to main menu item M9
		M	Save 400ms, return to main menu item M9
		M	Save 600ms, return to main menu item M9
		M	Save 800ms, return to main menu item M9
		M	Save 1000ms, return to main menu item M9

Submenu M9: monitoring of the rotational direction

	M	Jump to submenu M9

L		M	**Default:** Save OFF, return to main menu item M10
R		M	Save ON, return to main menu item M10

Submenu M10: blocking protection

	M	Jump to submenu M10

L		M	**Default:** Save OFF, return to main menu item M11
R		M	Save ON, return to main menu item M11

Submenu M11: contrast setting for the LCD display

	M	Jump to submenu M11

An LCD display is available as a special option.

		M	Save contrast 0 (= min.), return to main menu item M12
▲		M	Save contrast 1, return to main menu item M12
L		M	Save contrast 2, return to main menu item M12
...			...
R		M	Save contrast 14, return to main menu item M12
▼		M	Save contrast 15 (= max.), return to main menu item M12

Submenu M12: EXIT

	M	Exit the programming menu

11 Reset-function

The controller can be reset to factory settings as follows.

6. Switch off the operating voltage of the controller.
7. Press all three buttons (L)(M)(R) at the same time and keep them pressed.
8. Switch on the operating voltage of the controller and keep the buttons pressed.
9. After 3 s, the LED display shows the character string

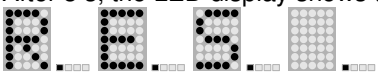

10. Release the buttons. The controller is now reset to factory settings.

12 Fault message contact

Manual mode

Contact is open

Automatic mode

Contact is closed

In automatic mode, contact opens in these cases:

– blocking detected (if monitoring is activated)
– wrong direction of rotation (if monitoring is activated)
– setvalue < 4mA/2V (if setvalue (min.) is set to 4mA/2V)
– temperature > 75 °C for more than 3 minutes at the controller

13 Error messages

Representation of errors

	both end positions not parameterized **LCD:** ParamErr / No EndP
	left end position not parameterized **LCD:** ParamErr / No EndPL
	right end position not parameterized **LCD:** ParamErr / No EndPR
	distance between end positions too small **LCD:** ParamErr / EndP L-R
	Measuring of positioning speed faulty; monitoring of the rotational direction and blocking protection not possible; error message is displayed only if monitoring of the rotational direction or blocking protection is switched on in the parameterization menu **LCD:** ParamErr / No Speed
	only in automatic mode: setvalue below 4mA (if setvalue (min.) is set to 4mA) **LCD:** AUTO ERR / SetV Low
	only in automatic mode: temperature > 75 °C for more than 3 minutes at the controller (see section 5 “Safety functions”

14 LCD display (option)

The LCD display facilitates menu navigation by showing the individual parameters as plain text. The input and output values can also be displayed.

Layout of the LCD display

Line 1:	AUTO ▮
Line 2:	A : 100%

Manual or automatic mode

Line 1:

- Mode status: AUTO = Automatic mode
  MANU = Manual mode
- Actuator status: ▮ = Motor off
  ←L = Left-hand rotation is active
  R→ = Right-hand rotation is active

Line 2: variable measured values (can be changed by pressing Ⓜ)

- **A**: actual value 0 … 100%
- **A**: actual value 0(4) … 20mA
- **A**: actual value 0(2) … 10V
- **S**: setpoint value 0 … 100%
- **S**: setpoint value 0(4) … 20mA
- **S**: setpoint value 0(2) … 10V

Programming mode

Main menu:

- Line 1: **CONFIG:**
- Line 2: menu item

Submenu:

- Line 1: main menu item
- Line 2: submenu item selection/input value/output value

15 Technical data

Operating voltage

230V AC ±10%, 50/60Hz ±5%
115V AC ±10%, 50/60Hz ±5%

Fuse protection

- TR5, 500mA slow-blow
- Motor: No fuse protection of the motor current path; a suitable fuse protection must be provided externally

Motor control

- Relay 250V/16A, for 2-winding synchronous motor, 115/230V, 50/60Hz

Position limit switches

- External switches with on-board RC interference suppression

Environmental data

- Ambient temperature of controller: 0 ... +70°C
- Dust, humidity and vibration must be avoided
- Installation in actuators series N

System resolution of ADC and DAC

- 12 bit

Setpoint input

- 0(4) … 20mA or free values
- 0(2) … 10V or free values
- Potentiometer 1 … 10kΩ
- Limited protection against overvoltage and reverse polarity

Actual value encoder

- Potentiometer 1 … 10kΩ, attached with connector JST VH-B3P, line length max. 25cm

Actual value output

- Electrically isolated from setpoint input
- 0(4) … 20mA or free values
- 0(2) … 10V or free values
- Burden resistor max. 500Ω, output voltage max. 10V

Configurable

- Left and right end positions
- Selectable hysteresis
- Selectable cut-off delay time
- Monitoring of rotational direction can be activated
- Blocking protection can be activated
- Nonlinear characteristic (option)

Operation

- Buttons LEFT/MENU/RIGHT
- Switch AUTO/MANU
- Status indication:
  - 5x7 dot matrix LED display
  - LCD display (option)

Extension slot X7

- Connector to module for fieldbus communication (option)

Agromatic Regelungstechnik GmbH

Postfach 1162
33804 Oerlinghausen
Germany

Phone: +49 5202 9739-284
Fax: +49 5202 9739-25

E-mail: vertrieb@agromatic.de
Web: www.agromatic.de

Agromatic®
Stellantriebe · Actuators